Tagra | LED Strip Solderless Connector | Single Colour | 8mm | Tape to Tape | IP20 | Pack of 10

CONSOL8MMTTV2 / ITM000811

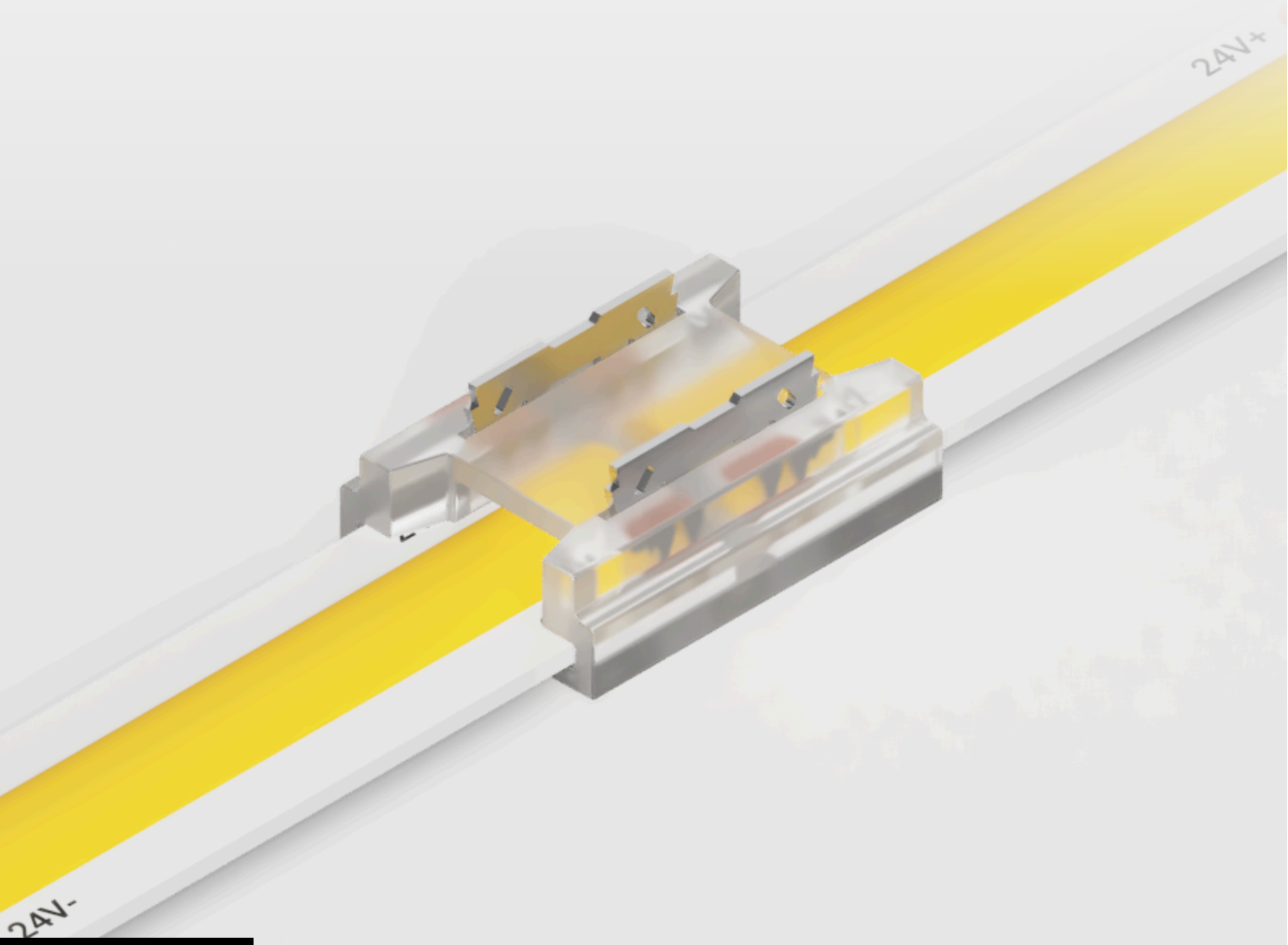

Datasheet

23-10-2026

www.tagra-lighting.co.uk

support@tagra-lighting.co.uk

Tagra | LED Strip Solderless Connector | Single Colour | 8mm | Tape to Tape | IP20 | Pack of 10

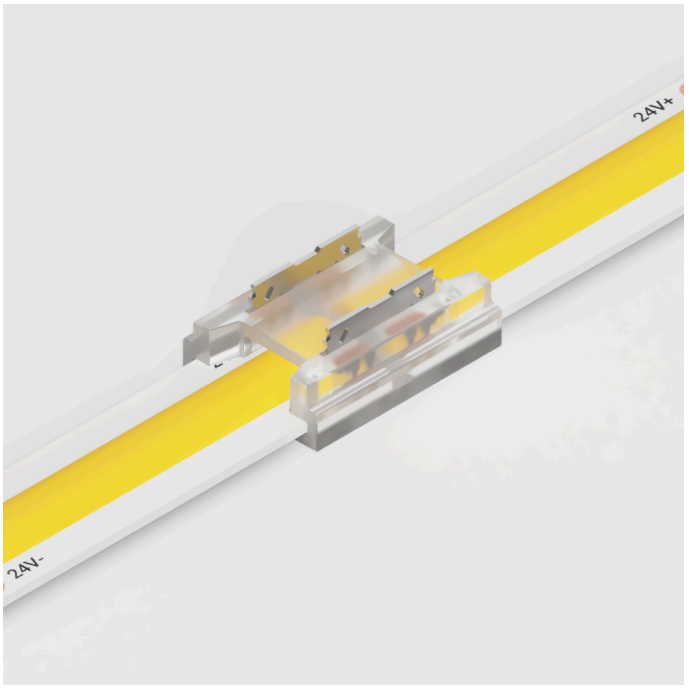

IP Rating	Max Width	Pack Size	Voltage In	Warranty
IP20	8mm	10 PCS	24V	2 Years

SKU: CONSOL8MMTTV2
ITM: ITM000811

Key Features:

- **Connector Type:** Tape to Tape
- **Dimensions (W x H x L):** 10 x 5 x 134mm

Mechanical Data			
Body Colour:	Transparent	**Connector Type:**	Tape to Tape
Max. LED Strip Light Width:	8mm	**Product Weight:**	2g
Dimensions (LxWxH):	134 x 10 x 5mm		

Electrical Data	
Current Max. Rated:	5A

Input Data	
Input Voltage:	24V

Environmental Data			
Body Material:	Polyimide	**Ingress Protection (IP):**	IP20

Dimension Drawing

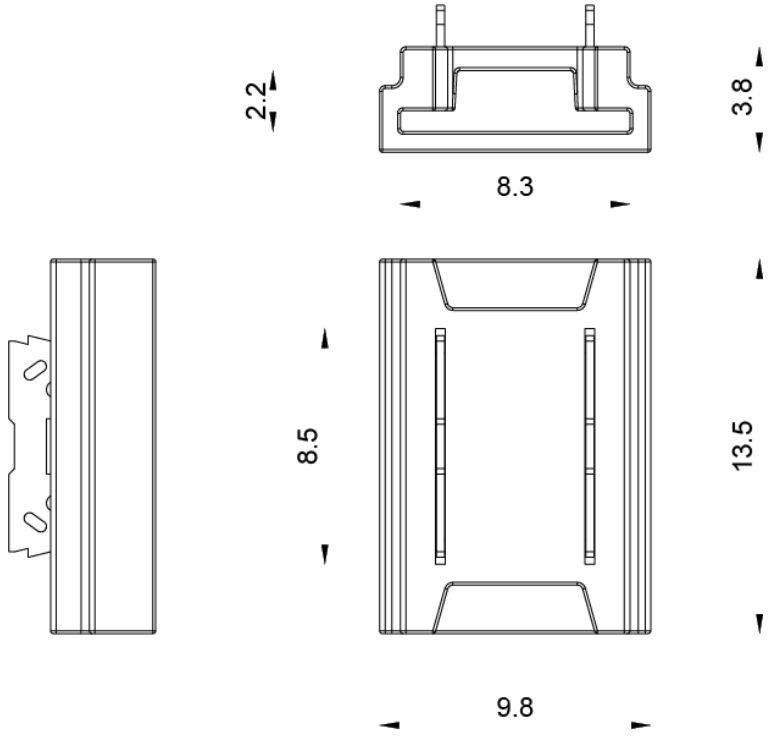

Packaging Data

Items / Sets Per Pack:	10	**Packaging Height:**	5mm
Packaging Length:	160mm	**Packaging Width:**	120mm
Packaging Weight:	6g		

Disclaimer

Tagra Lighting have taken reasonable care to ensure that the information in this datasheet is accurate at time of publication however it should be noted that all specifications are subject to tolerance. Descriptive specifications such as colour are subjective. Tagra Lighting reserve the right to update specifications without notice. The information in the datasheet may only be relied on by customers of Tagra Lighting in accordance with applicable terms and conditions.

Tagra Lighting is a trading name of T.R Ventures Limited, a company incorporated in England with registered number 07757720. Our registered office is Unit 2, Southfield Industrial Estate, Trafford Park, M17 1SJ.

www.tagra-lighting.co.uk

support@tagra-lighting.co.uk